NOTE: DIMENSIONS LOCATED IN BOXES ARE COMMON
SETBACK DIMENSIONS FOR EACH FITTING

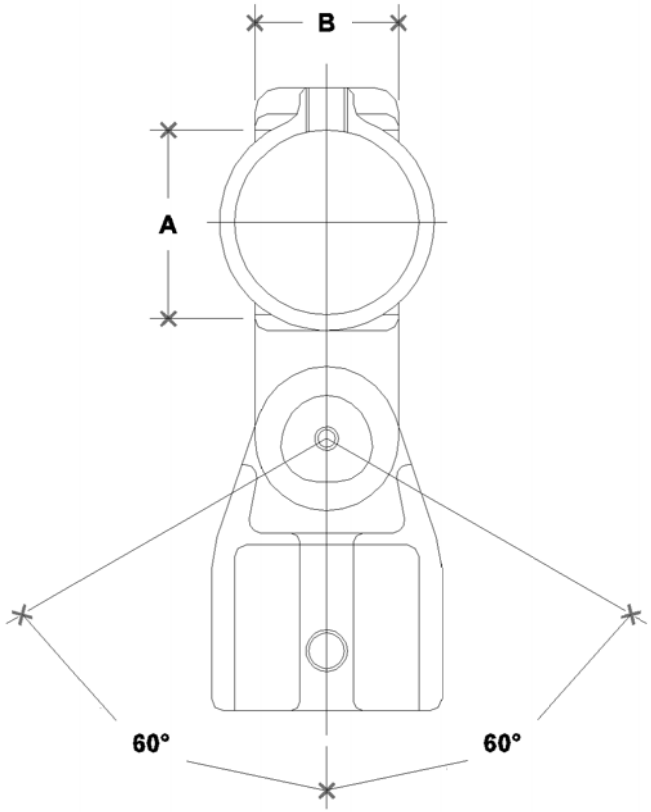

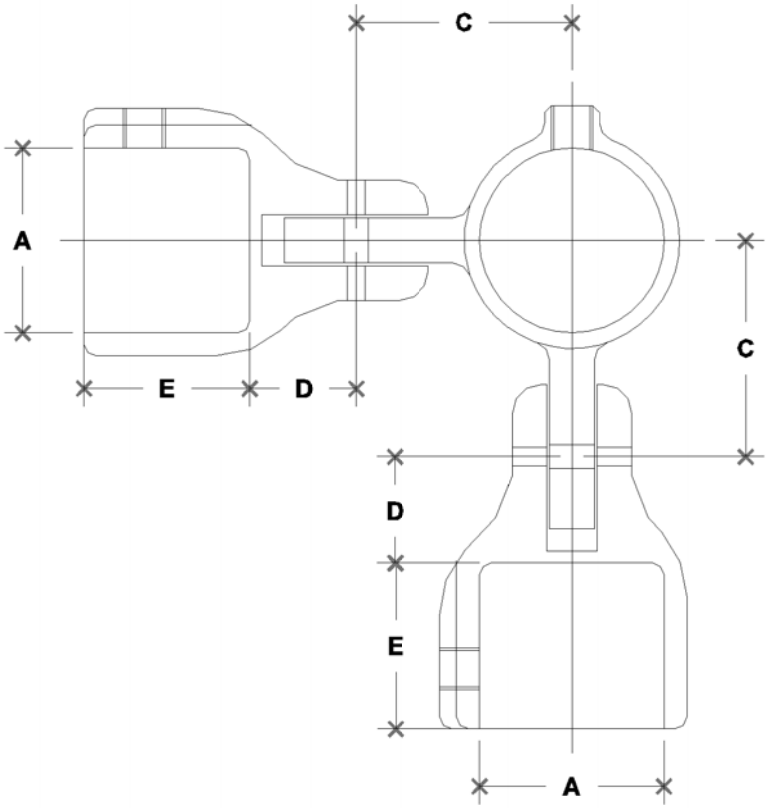

#27E Double Adjustable Side Outlet Tee-E

SCALE: HALF

ENGLISH UNITS (Inches)							
PIPE SIZE	A	B	C	D	E	F	G
1½"	1.93	1.50	2.25	1.11	1.73		

METRIC UNITS (mm)							
PIPE SIZE	A	B	C	D	E	F	G
1½"	49	38	57	28	44		